KASKODNO pojačalo na VF

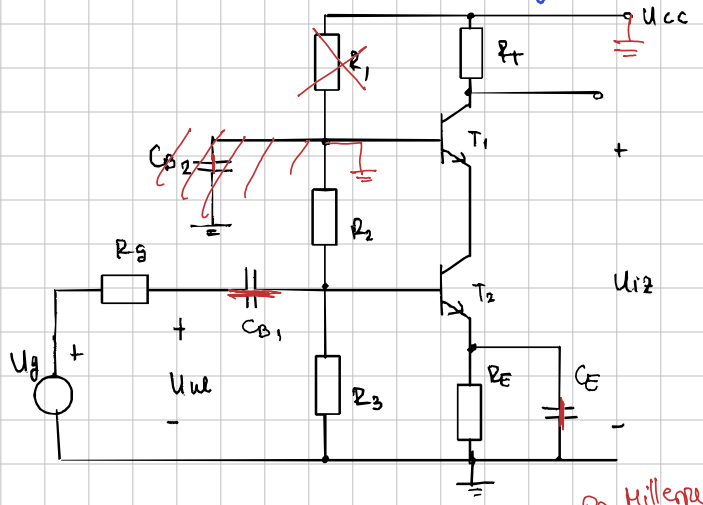

SZE

→ dobra svojstva na srednjim i lošija na visokim frekv.

SZB

→ lošija svojstva na srednjim i dobra na visokim frekv.

Kaskodno: objedinjuje dva svojstva

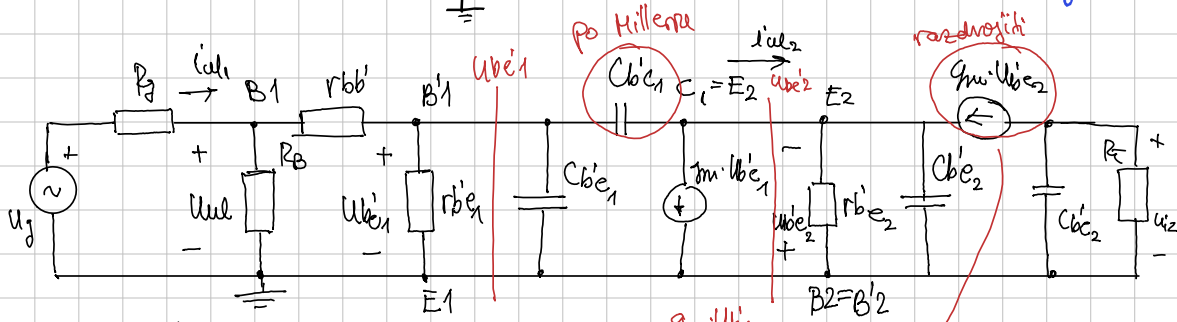

$R_B = R_2 \parallel R_3$

Ulazna struja kapacitet

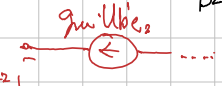

$$R' = \frac{u}{i} = \frac{-u_{be2}}{-g_m \cdot u_{be2}} = \frac{1}{g_m}$$

Prvo trebamo K → odspojeni svi C

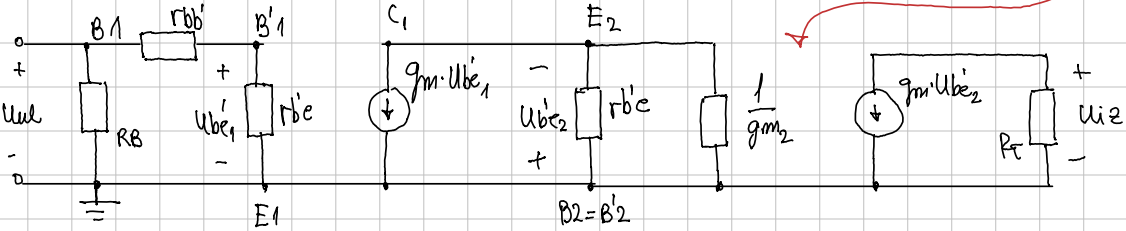

$$r_{b'e} \parallel \frac{1}{g_{m2}} = \dots = \frac{r_{b'e2}}{1 + g_{m2} \cdot r_{b'e2}} = \frac{r_{b'e2}}{1 + h_{fe}}$$

$$K = \frac{-u_{be'2}}{u_{be'1}} = -\frac{g_m \cdot \frac{r_{b'e2}}{1+h_{fe}} \cdot \cancel{u_{be'1}}}{\cancel{u_{be'1}}} = -g_m \cdot \frac{r_{b'e2}}{1 + g_m \cdot r_{b'e2}}$$

$$\boxed{K \approx -1}$$

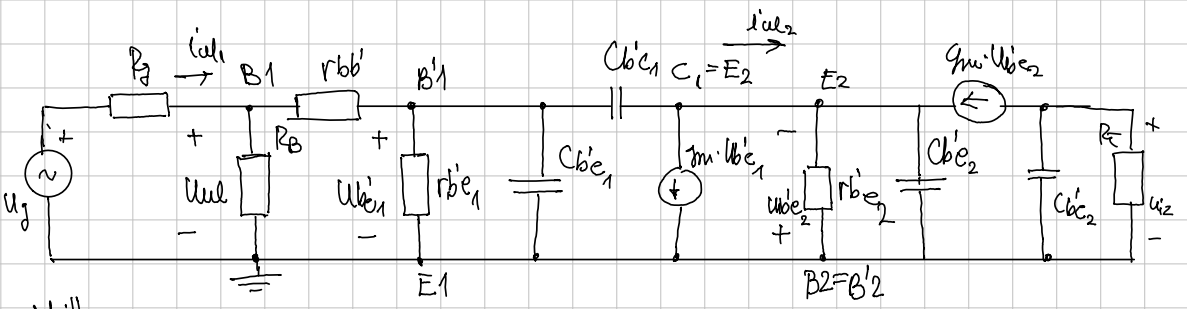

Miller

$$C_1 = C_{b'e_1} + C_{b'c_1}\cdot(1-K) = C_{b'e_1} + \underline{2C_{b'c_1}}$$

$$C_2 = C_{b'c_1}\cdot\frac{K-1}{K} + C_{b'e_2} = \underline{2C_{b'c_1}} + C_{b'e_2}$$

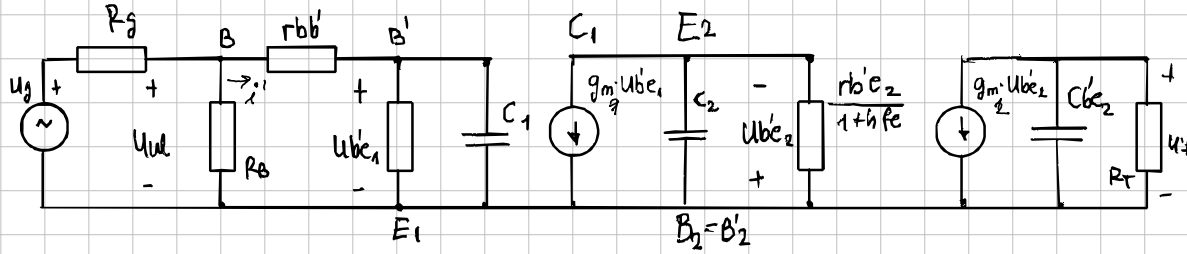

$$A_v(j\omega) = \frac{A_{v0}}{\left(1+j\frac{\omega}{\omega_1}\right)\left(1+j\frac{\omega}{\omega_2}\right)\left(1+j\frac{\omega}{\omega_3}\right)} \Rightarrow A_{v0} = \frac{U_{iz}}{U_{be_2}}\cdot\frac{U_{b'e_2}}{U_{b'c_1}}\cdot\frac{U_{b'e_1}}{U_{ul}}$$

$$A_{v0} = \frac{-g_{m_2}\cdot \cancel{U_{b'e_2}}\cdot R_T}{\cancel{U_{b'e_2}}}\cdot\underbrace{\frac{\cancel{g_{m_1}}\cdot\cancel{U_{b'e_1}}\;\frac{r_{b'e_2}}{1+h_{fe}}}{\cancel{U_{b'e_1}}}}_{1}\cdot\frac{\cancel{i'}\cdot r_{be_1}}{\cancel{i'}\cdot(r_{bb'}+r_{b'e_1})}$$

$$\frac{r_{b'e_2}}{1+h_{fe}} \quad r_{b'e_2}\cdot g_{m_2}$$

$$A_{v0} = -g_{m_2}\cdot R_T\cdot\underbrace{\frac{r_{b'e_1}}{r_{bb'}+r_{b'e_1}}}_{\approx 1,\ <1} \Rightarrow A_{v0} \approx -g_m\cdot R_T$$

$$\boxed{\omega_1} = \frac{1}{\tau_1} = \frac{1}{C_1\cdot(r_{bb'}\parallel r_{b'e_1})} = \frac{1}{(C_{b'e_1}+2C_{b'c_1})(r_{bb'}\parallel r_{b'e_1})}$$

$$\boxed{\omega_2} = \frac{1}{\tau_2} = \frac{1}{(C_{b'e_2}+2C_{b'c_1})\,\frac{r_{b'e_2}}{1+h_{fe}}}$$

$$\boxed{\omega_3} = \frac{1}{\tau_3} = \frac{1}{C_{b'c_2}\cdot R_T}$$

1. stupanj → mali iznos naponskog pojačanja zbog malog Rul

2. stupanj → smanjen Millerov ef.
⇒ smanjen τ_1

▷ male vremenske τ_2 i τ_3
• povećana f_g

Przykład 5.7.) $A_{v0} = ?$ $f_g = ?$ SZE i kaskoda

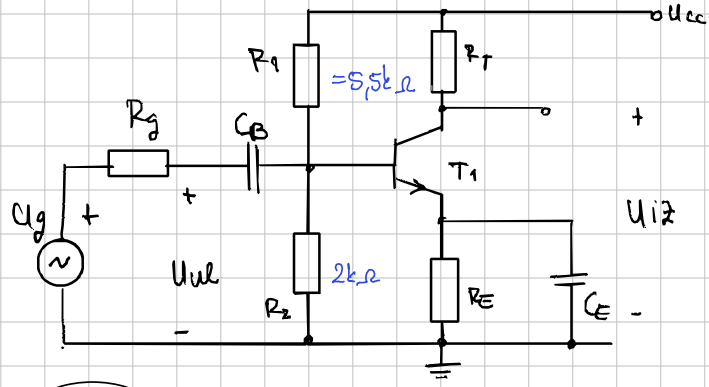

$U_{CC} = 15V$ $\beta \approx h_{fe} = 100$

$R_g = 500\Omega$ $U_\gamma = 0.7V$

$R_E = 1{,}1k\Omega$ $r_{bb'} = 100\Omega$

$R_T = 1k\Omega$ $C_{b'e} = 50pF$

$C_{b'c} = 1pF$

$U_T = 25mV$

Statika $R_B = R_1 \| R_2 = \boxed{1466.7\Omega}$

$$I_{BQ} = \frac{U_{BB} - U_{BEQ}}{R_B + (1+\beta)R_E} \qquad U_{BB} = \frac{R_2}{R_1+R_2} \cdot U_{CC} \rightarrow U_{BB} = 4V$$

$$\boxed{I_{BQ} = 29.32\mu A} \rightarrow r_{b'e} = \frac{U_T}{I_{BQ}} \Rightarrow r_{b'e} = 851.5\Omega$$

$$g_m = 0.117 A/V$$

Kaskoda

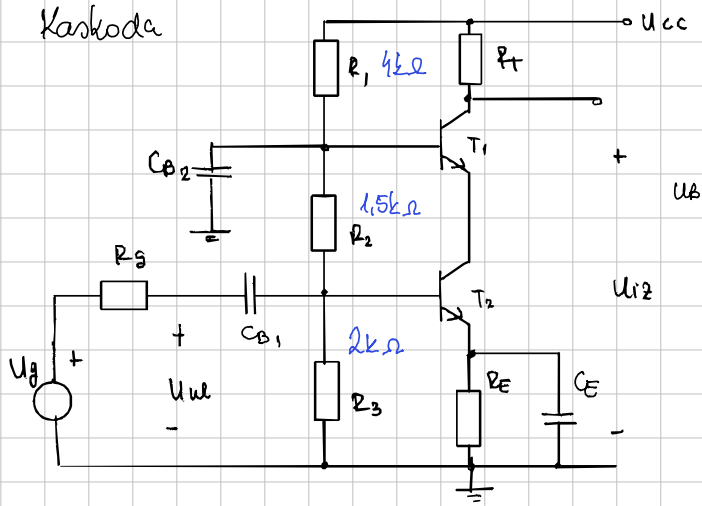

Statika

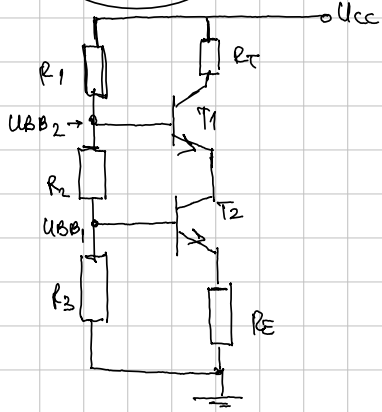

$$U_{BB_1} = U_{CC} \cdot \frac{R_3}{R_1+R_2+R_3} = \dots = 4V$$

$$R_{B_1} = R_g \| (R_1 + R_2) = \boxed{1.47k\Omega} \parallel R_E$$

$$I_{BQ_1} = I_{BQ_2} = \frac{U_{BB_1} - U_{BEQ1}}{R_{B_1} + (1+\beta)R_E} = \dots = \boxed{29{,}3\mu A = I_{BQ}}$$

$$r_{b'e_1} \approx r_{b'e_2} = \frac{U_T}{I_{BQ}} = \dots \Rightarrow \boxed{r_{b'e_1} = 851.5\Omega} \rightarrow \boxed{g_m = 0.117 A/V}$$

SZE: Dinamika

$r_{bb'} = 100\,\Omega$ $\quad r_{b'e} = 852\,\Omega$ $\quad R_T = 1k\Omega$

$C_{b'e} = 90pF$ $\quad C_{b'c} = 1pF$

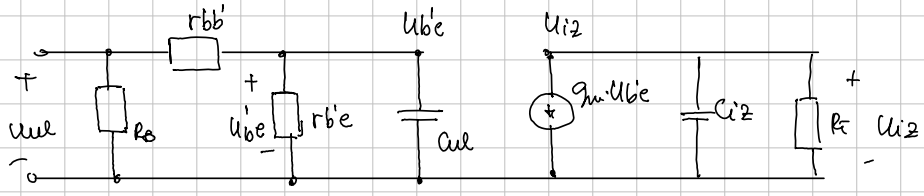

$C_{ul} = C_{b'e} + (1-K)\,C_{b'c}$ $\qquad C_{iz} = C_{b'c} \cdot \frac{K-1}{K}$

$K = \frac{u_{iz}}{u_{b'e}} = -g_m \cdot R_T \Rightarrow \boxed{K = -123}$

$\Rightarrow \boxed{C_{ul} = 174pF}$ $\qquad \Rightarrow \boxed{C_{iz} = 1pF}$

$A_v(j\omega) = A_{v0} \cdot \frac{1}{\left(1+j\frac{\omega}{\omega_{ul}}\right)\left(1+j\frac{\omega}{\omega_{iz}}\right)}$ $\rightarrow A_{v0} = \frac{u_{iz}}{u_{b'e}} \cdot \frac{u_{b'e}}{u_{ul}} = K \cdot \frac{r_{b'e}}{r_{bb'} + r_{b'e}}$

$\Rightarrow A_{v0} = -109.5$

$\omega_{ul} = \frac{1}{\tau_{ul}} = \frac{1}{C_{ul} \cdot (r_{bb'} \parallel r_{b'e})}$

$\omega_{ul} = \dots = 64.6 \times 10^6\ rad/s \rightarrow f_{ul} = 10.28MHz$

$\boxed{f_g = f_{ul} = 10.28MHz}$

$\omega_{iz} = \frac{1}{\tau_{iz}} = \frac{1}{C_{iz} \cdot R_T} = \dots = 10^9\ rad/s \Rightarrow f_{iz} = 159MHz$

Kaskoda: Dinamika

$r_{bb'} = 100\,\Omega$ $\quad r_{b'e_1} = r_{b'e_2} = 852\,\Omega$ $\quad R_T = 1k\Omega$

$C_{b'e} = 90pF$ $\quad C_{b'c} = 1pF$ $\quad g_{m1} = g_{m2} = 0.117\frac{A}{V}$

$A_v(j\omega) = \frac{A_{v0}}{\left(1+j\frac{\omega}{\omega_1}\right)\left(1+j\frac{\omega}{\omega_2}\right)\left(1+j\frac{\omega}{\omega_3}\right)}$ $\rightarrow A_{v0} = -g_{m2} R_T \cdot \frac{r_{b'e_1}}{r_{bb'_1} + r_{b'e_1}} = \dots = -104.7$

$\omega_1 = \frac{1}{(C_{b'e_1} + 2C_{b'c})(r_{b'e_1} \parallel r_{bb'_1})} = \dots = 215 \times 10^6\ rad/s \Rightarrow f_1 = 34.2\ MHz$

$\omega_2 = \frac{1}{C_{b'e_2} + C_{b'c_1}\frac{r_{b'e_2}}{1+h_{fe}}} = \dots = 2{,}28 \times 10^9\ rad/s \rightarrow f_2 = 362\ MHz$

$\omega_3 = \frac{1}{C_{b'e_2} \cdot R_T} = \dots = 10^9\ rad/s \rightarrow f_3 = 159\ MHz$

$\Downarrow$

$\boxed{f_g = f_1 = 34.2\ MHz}$